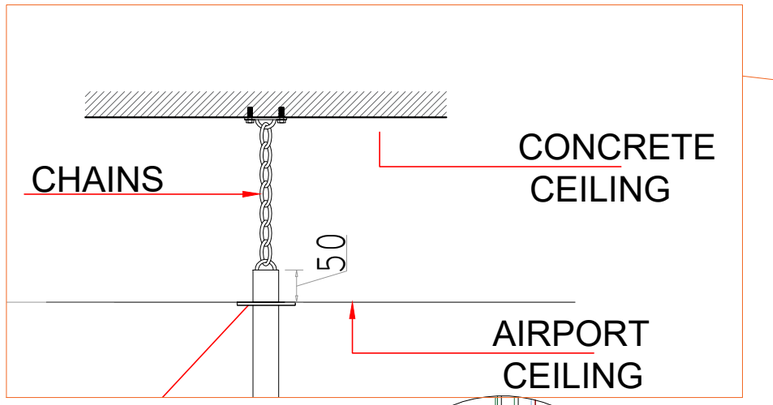

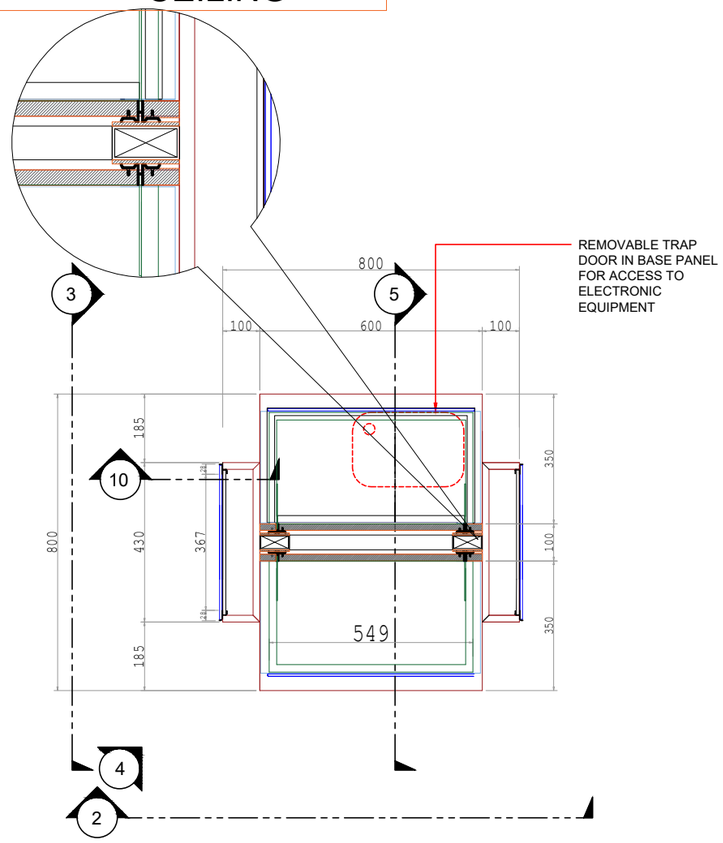

1 PLAN

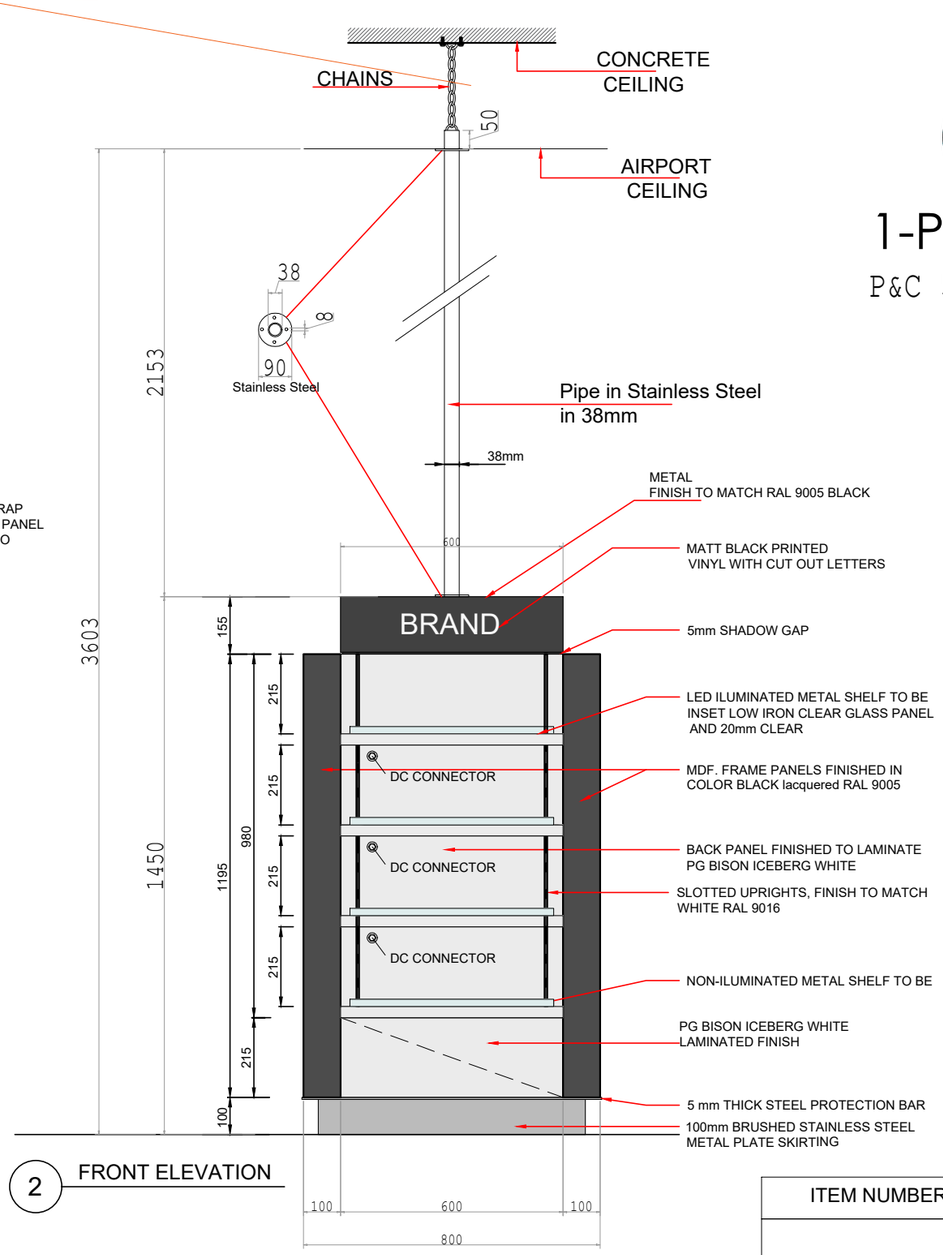

2 FRONT ELEVATION

1-P2

1-P2 (3UNIT)

P&C 5 Bay Gondola

WOODstyles	5		10		
	4		9		
	3		8		
DOCUMENT CODE: WS-DS-SD-01	2	DSD-V1-RD- 29/11/2021	7		
ISSUE DATE: OCT. 2021	1	DSD-V1-RD- 12/10/2021	6		
REVISION DATE: OCT. 2021	N°	Date	Last revision titles		

Client	DUFRY	Drawn By	OBJ
		Checked	---
Project	Abuja, Duty Free	Date	29/11/2021
		Scale	--
Title	1-P2 PLAN / ELEVATIONS	Approved	Samir Bader

ITEM NUMBER	
Drawing Number	
WS-DS-SD-DF-003	
Sheets No	Location No
1	

LIST OF MATERIAL & CODE

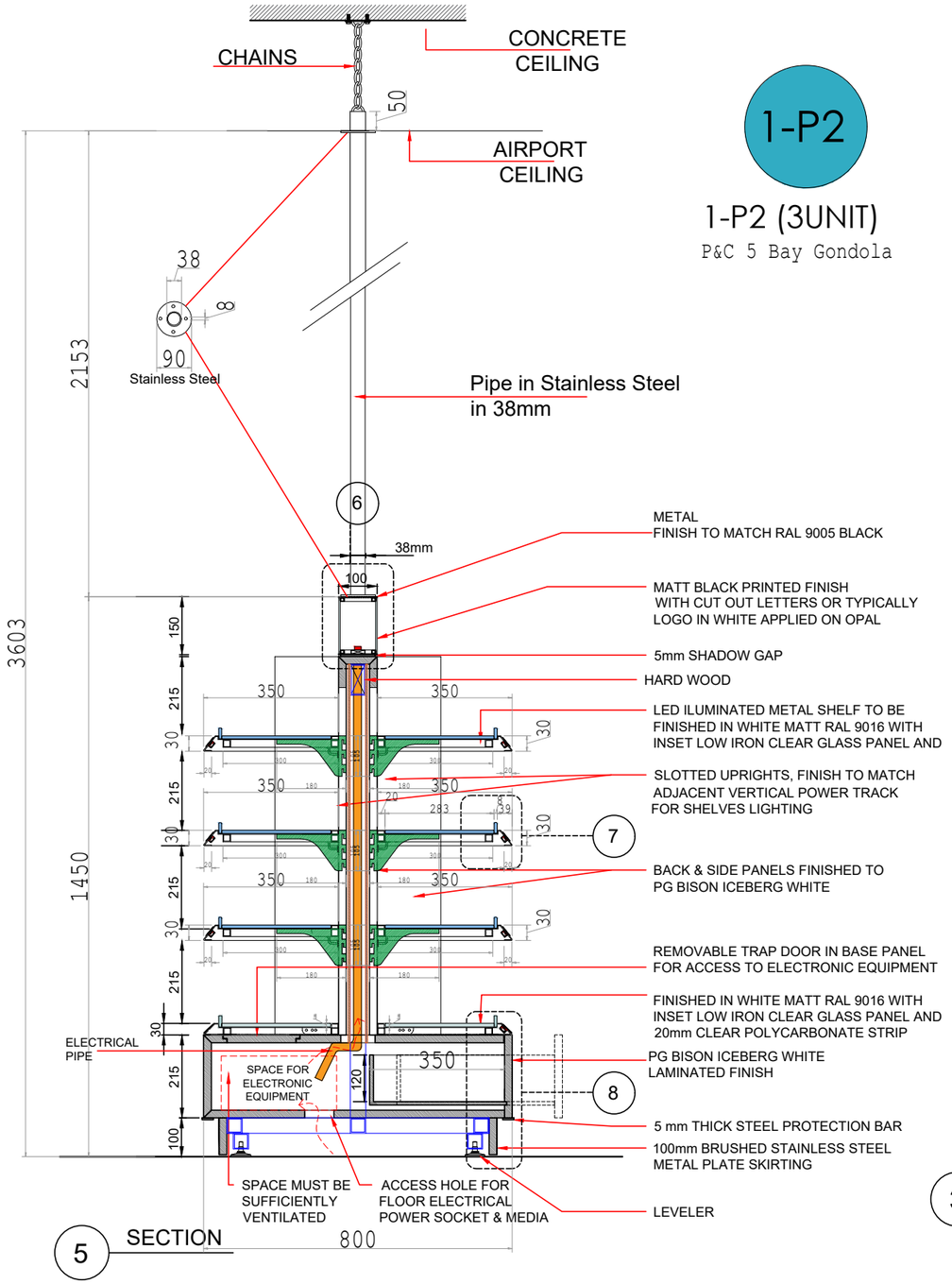

5 SECTION

1-P2

1-P2 (3UNIT)

P&C 5 Bay Gondola

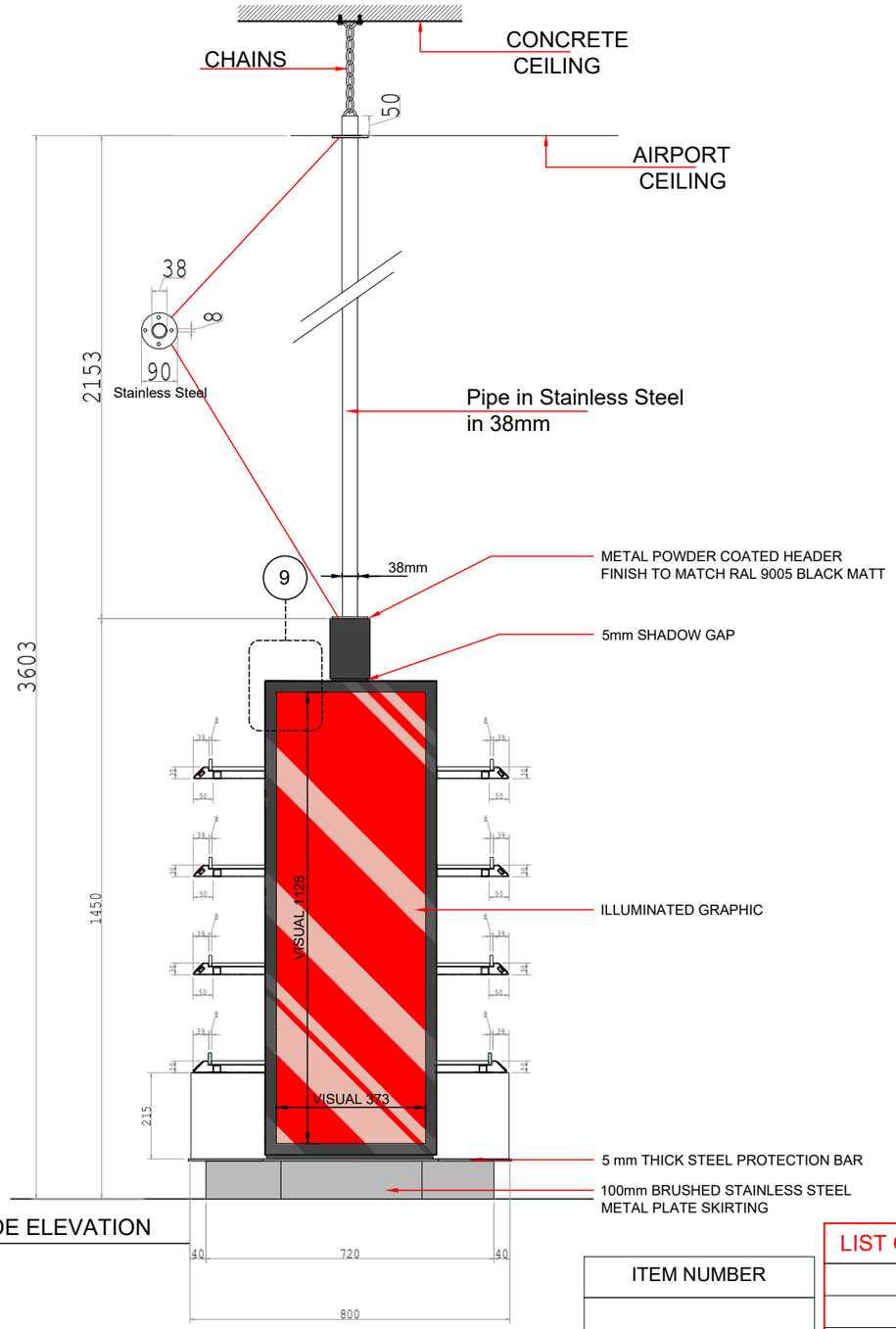

3 SIDE ELEVATION

ITEM NUMBER	
Drawing Number	
WS-DS-SD-DF-003	
Sheets No	Location No
2	

LIST OF MATERIAL & CODE

WOODstyles

DOCUMENT CODE:	WS-DS-SD-01
ISSUE DATE:	OCT. 2021
REVISION DATE:	OCT. 2021

N°	Date	Last revision titles		
5			10	
4			9	
3			8	
2	DSD-V1-RD-	29/11/2021	7	
1	DSD-V1-RD-	12/10/2021	6	

Client	DUFRY	Drawn By	OBJ
		Checked	---
Project	Abuja, Duty Free	Date	29/11/2021
		Scale	--
Title	1-P2 SECTIONAL DETAILS / ELEVATION	Approved	Samir Bader

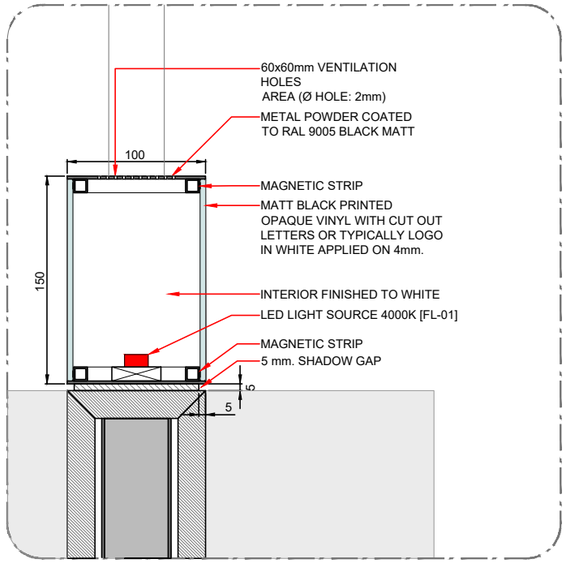

6 BRAND HEADER DETAIL

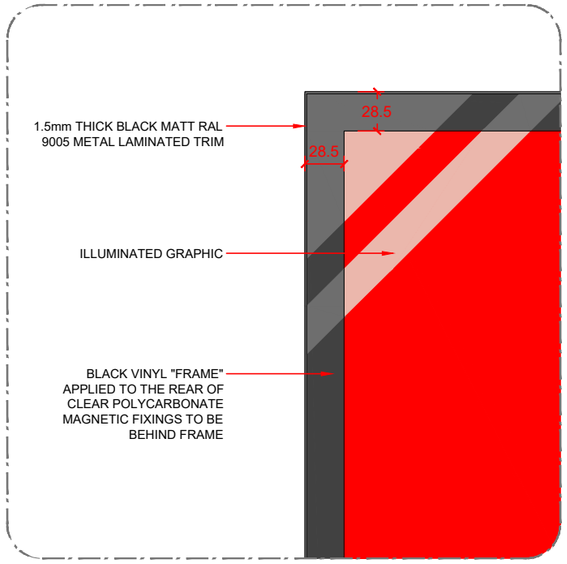

9 LIGHTBOX DETAIL

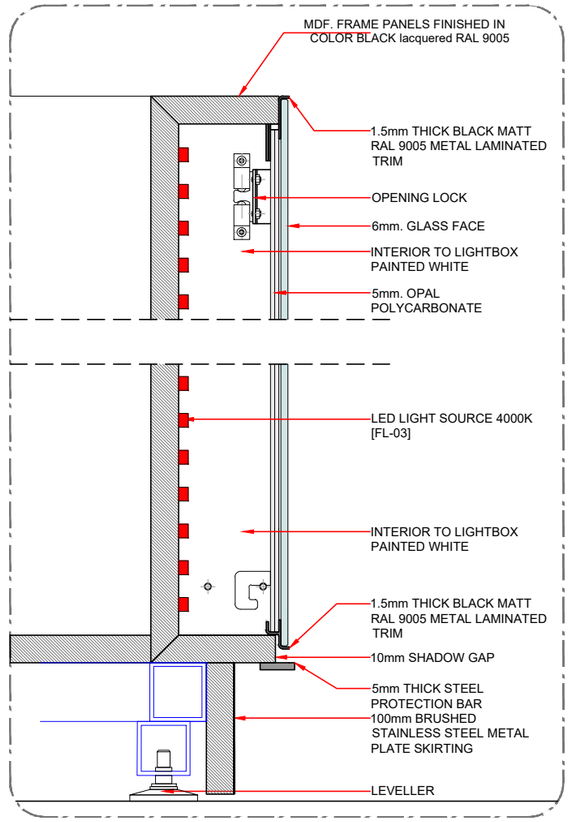

10 LIGHTBOX SECT. DETAIL

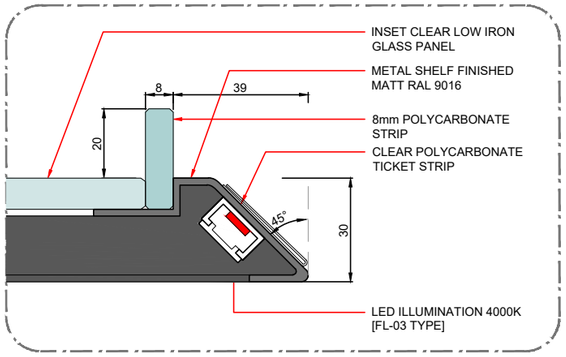

7 SHELF DETAIL

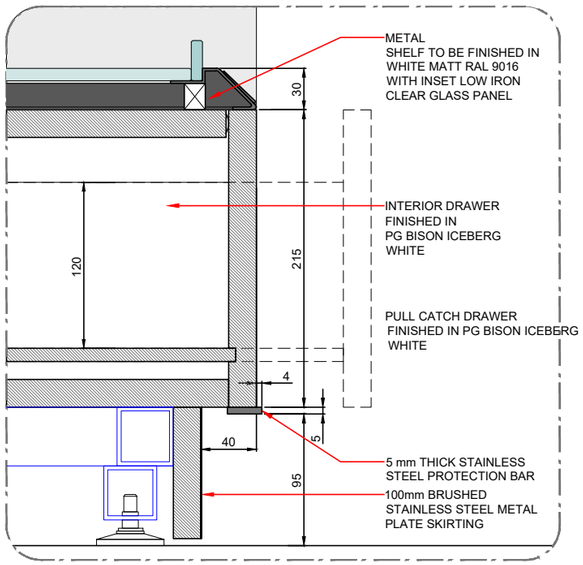

8 BASE DETAIL

WOODstyles	5		10		Client	DUFRY	Drawn By	OBJ	ITEM NUMBER	LIST OF MATERIAL & CODE
	4		9				Checked	---	Drawing Number	
	3		8		Project	Abuja, Duty Free	Date	29/11/2021	WS-DS-SD-DF-003	
DOCUMENT CODE: WS-DS-SD-01	2	DSD-V1-RD- 29/11/2021	7				Scale	--	Sheets No / Location No	
ISSUE DATE: OCT. 2021	1	DSD-V1-RD- 12/10/2021	6		Title	1-P2 SECTIONAL DETAILS	Approved	Samir Bader	3	
REVISION DATE: OCT. 2021	N°	Date	Last revision titles							

1-P2

1-P2 (3UNIT)

P&C 5 Bay Gondola ((LIGHT BOX))

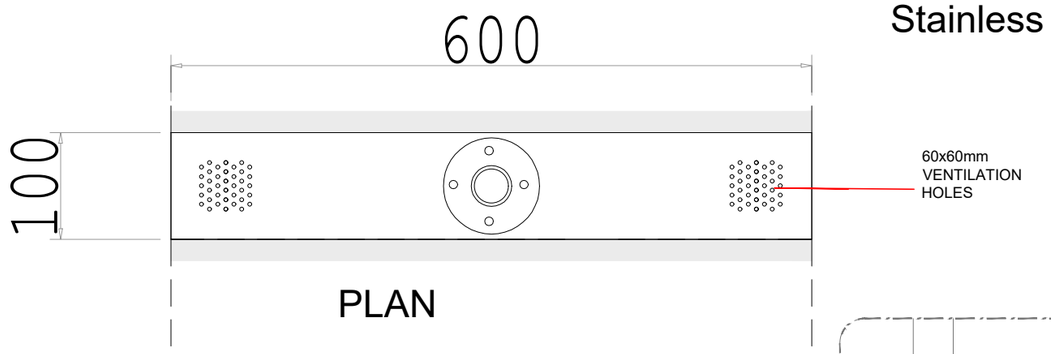

PLAN

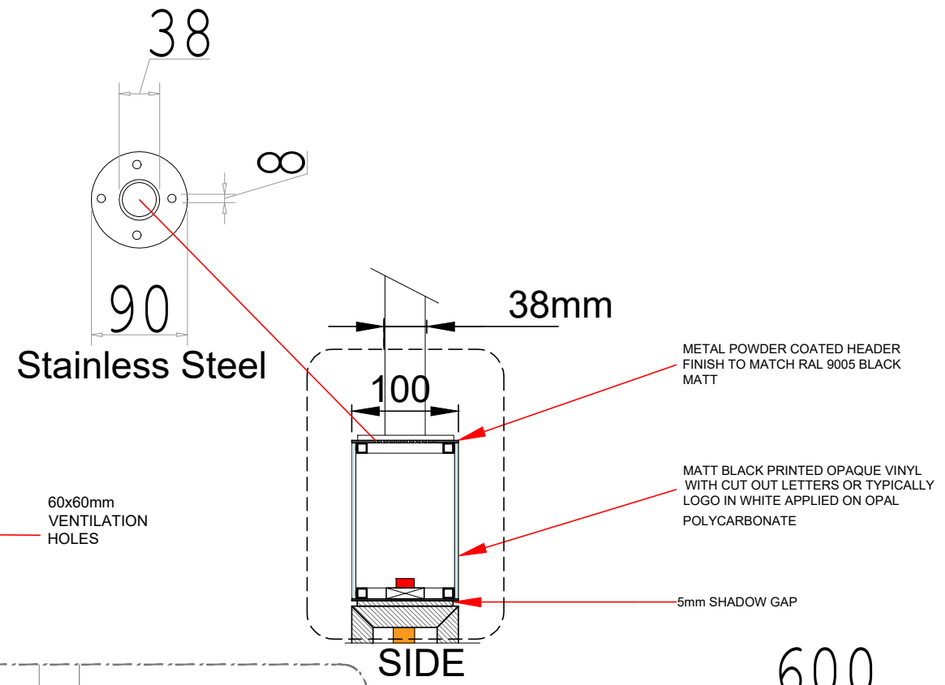

SIDE

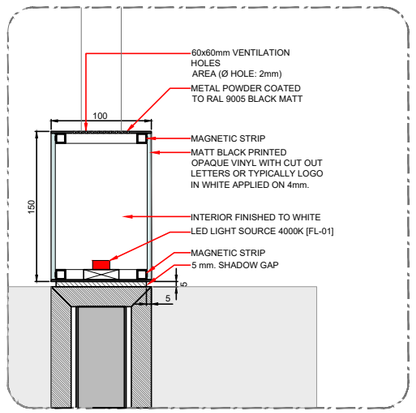

6 BRAND HEADER DETAIL
scale: 1/5

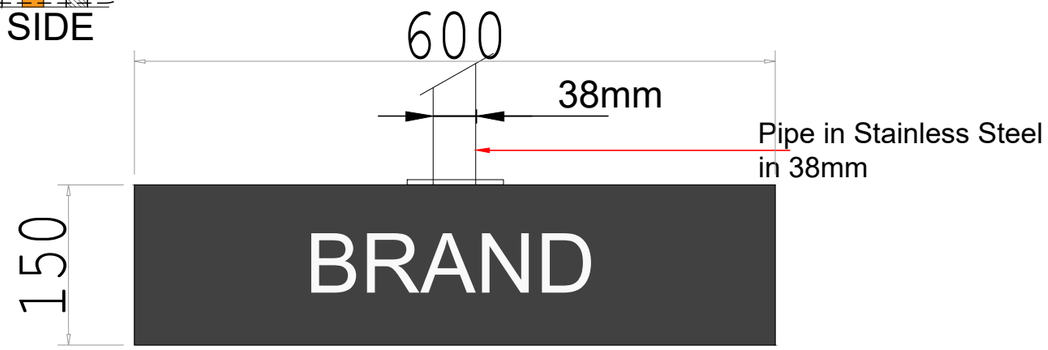

FRONT

WOODstyles	5		10		Client	DUFRY	Drawn By	OBJ	Drawing Number	
	4		9				Checked	---	WS-DS-SD-DF-003	
	3		8		Project	Abuja, Duty Free	Date	29/11/2021		
DOCUMENT CODE: WS-DS-SD-01	2	DSD-V1-RD- 29/11/2021	7				Scale	--	Sheets No	Location No
ISSUE DATE: OCT. 2021	1	DSD-V1-RD- 12/10/2021	6		Title	1-P2 STEEL DETAILS	Approved	Samir Bader	5	
REVISION DATE: OCT. 2021	N°	Date	Last revision titles							

ITEM NUMBER

LIST OF MATERIAL & CODE

1-P2

1-P2 (3UNIT)

P&C 5 Bay Gondola (6 LIGHT BOX)

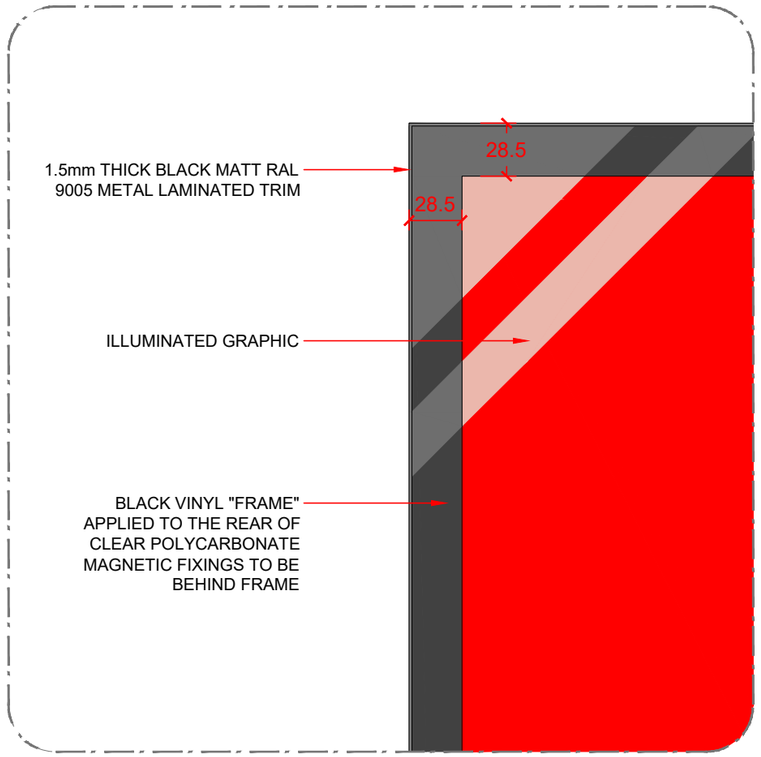

9 LIGHTBOX DETAIL

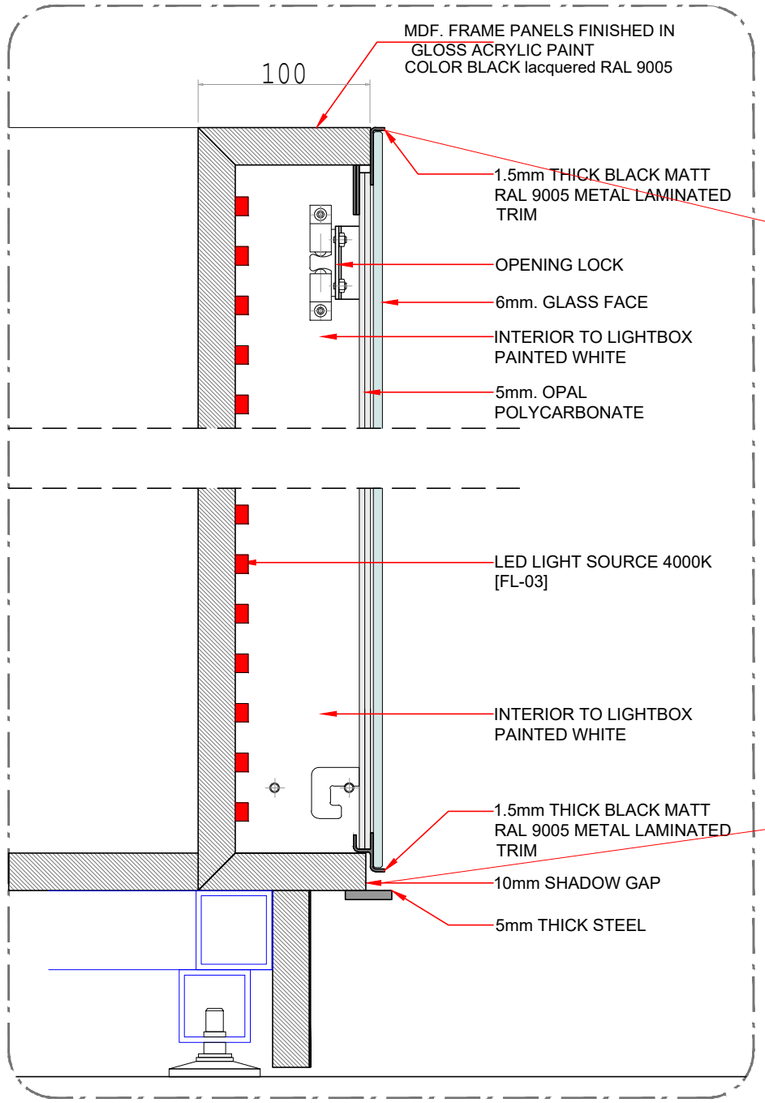

10 LIGHTBOX SECT. DETAIL

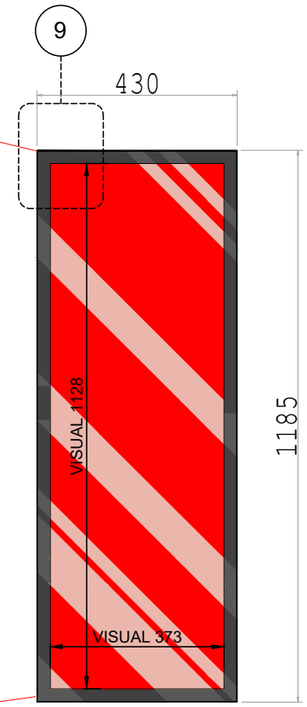

FRONT

WOODstyles	5		10		Client	DUFRY	Drawn By	OBJ	Drawing Number	
	4		9				Checked	---	WS-DS-SD-DF-003	
	3		8		Project	Abuja, Duty Free	Date	29/11/2021		
DOCUMENT CODE: WS-DS-SD-01	2	DSD-V1-RD- 29/11/2021	7				Scale	--	Sheets No	Location No
ISSUE DATE: OCT. 2021	1	DSD-V1-RD- 12/10/2021	6		Title	1-P2 LIGHT BOX	Approved	Samir Bader	6	
REVISION DATE: OCT. 2021	N°	Date	Last revision titles							

ITEM NUMBER	

LIST OF MATERIAL & CODE	